NAKASAWA

FEED WATER TREATMENT BY ION EXCHANGE FOR A HIGH STEAM QUALITY SYSTEM "SMH"

The quality of the feed water for an **Integral High Steam Quality System SUPER MATROID HEATER™ (SMH)** directly influences its proper operation, as well as the useful life of the components that make up the System.

In order to understand the importance of the feed water quality, it is necessary to know its composition, as well as the specific needs or requirements of the Steam Injection Process.

It is very important to be careful when treating the feed water of a Steam Injection System due to its chemical complexity; in this sense, there is no simple procedure or appropriate chemical for the processing of all types of feed water. Each case must be considered separately, after carrying out the analysis of the chemical composition.

During a thermal stimulation process with steam injection, it is necessary to have reliable water sources to generate the steam that will be injected into a reservoir. In some cases the water used in the process comes from raw water supply wells.

Water Treatment by filter and Ion Exchange with Cationic Resins system is of vital importance for an Integral High Steam Quality System SMH, because the impurities and hard salts (insoluble salts such as Ca^{++} & Mg^{++}) contained in the feed water are eliminated; Therefore, it is essential to ensure the steam quality, extend the useful life of the equipment, avoid problems of corrosion and incrustations in the pipes and ensure its correct operation. In this way, the operation and maintenance costs of the entire Integral System are reduced.

WATER TREATMENT SYSTEM

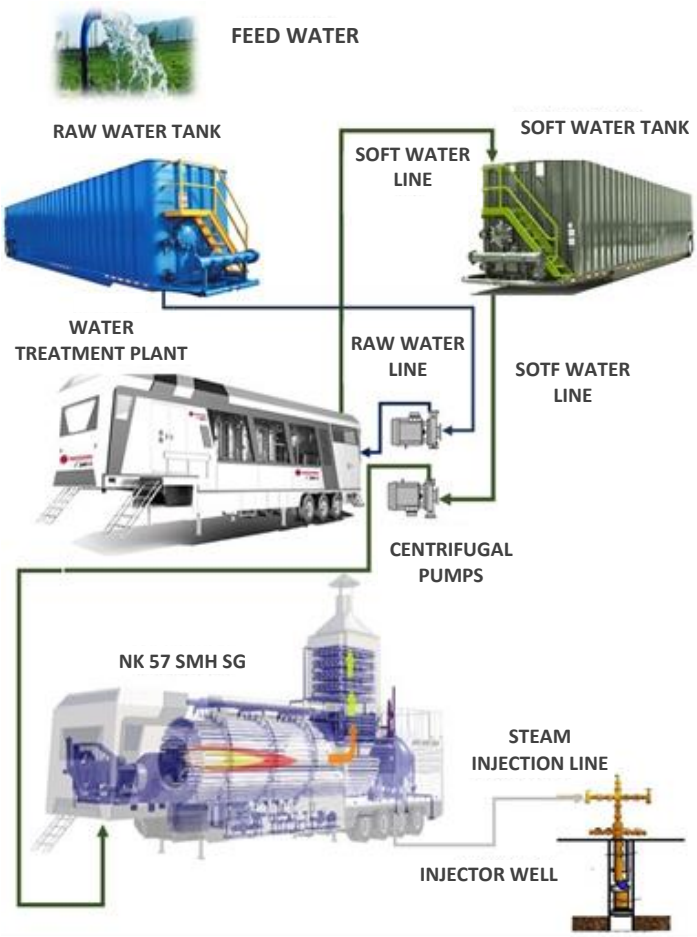

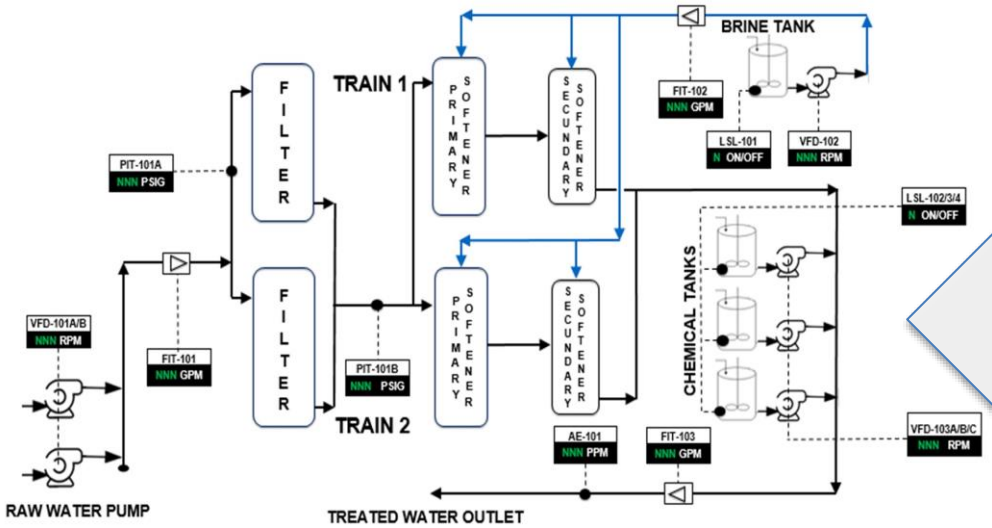

"Good feed water quality ensures higher Steam Quality, and therefore a higher heat transfer to the Reservoir is guaranteed"

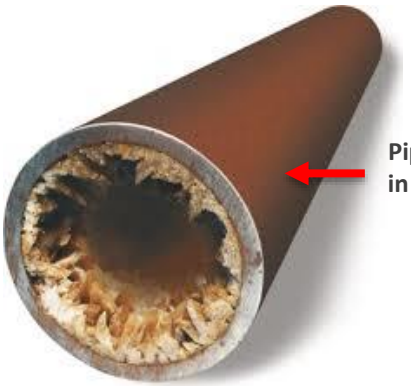

Pipe with scale in internal wall

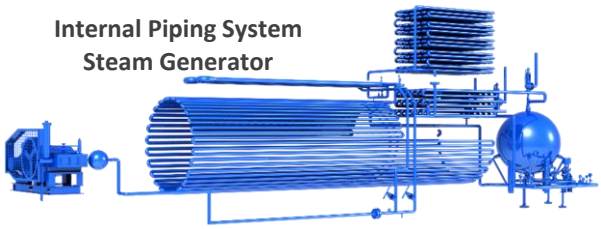

Internal Piping System
Steam Generator

OBJECTIVES OF THE FEEDWATER TREATMENT:

By Corrosion.

- Prevent the deterioration of metal surfaces, due to the action of oxygen, carbon dioxide and some salts such as sodium chloride

By Scale.

- Avoid the formation of scale deposits mitigating calcium and magnesium salts that adhere to metal surfaces.
- Prevent overheating of tubes and their deformation.
- Prevent the precipitation of suspended solids.

PARAMETERS INVOLVED IN THE FEED WATER TREATMENT:

Hardness

The hardness dissolved in the water quantifies the amount of calcium (Ca^{++}) and magnesium (Mg^{++}) ions, which favor the formation of deposits and encrustations (Scale) that are difficult to remove on the heat transfer surfaces, allowing the overheating of the metal surfaces and possible deformations.

pH

In order to avoid the corrosion of the metallic parts due to the presence of oxygen in the water, the measurement of the degree of alkalinity or acidity is used. The pH represents the degree of acidity or alkalinity of the water; therefore, its measurement and control is essential to mitigate the problems of corrosion (low pH) and scale (high pH).

- pH between 0 and 6: indicative of acidic water.
- pH equal to 7: indicative of neutral water.
- pH between 8 and 14: indicative of alkaline water.

For optimal operation of the SMH Integral System, it is recommended that pH of the water be in the range between 8.5 & 9.5 at the steam generator inlet.

pHMeter

Hardness Monitor

Portable Dissolved Oxygen Meter

Equipment for measuring Water Parameters

Oxygen

The oxygen present in the water accelerates the corrosion of the metallic components, at high pressure and temperature causing reduction of wall thickness of the tubes thus reducing reliability of the SMH Integral System.

As described above, before the soft water is fed to the steam generator, it is equally important to condition the feed water after the impurities and hard salts are removed from the raw water.

Chemical Conditioning

- pH adjustment (NaOH). with NaOH solution.
- EDTA (Chelating Agent to control traces of hardness).
- Oxygen scavenger (Na_2SO_3)

REGENERATION PROCESS WITH SALT (NaCl): SOFTENING TREATMENT (SOFTENING BY ION EXCHANGE)

Water can be softened, removing calcium and magnesium ions (Ca^{++} and Mg^{++}) through ion exchange between a liquid and a solid. The solid is called resin (zeolite), cationic exchange, because it is loaded with sodium cations (Na^{++}).

Ion exchange resins are made of solid synthetic material and insoluble in water, and are manufactured in the form of spheres or beads from 0.3 to 0.95 mm in size.

When the ionic exchange takes place, the filtration capacity of the resin begins to decrease because it has a limited capacity for the removal of ions from the solutions; therefore, the majority of its replacement ions will have yielded and a partial pass of unwanted ions to the produced water will occur. In this case, it is inferred that the resin is saturated with the acquired ions.

The regeneration of the resins is the reverse process of the ion exchange process and its purpose is to restore the resin to its initial exchange capacity. This is carried out by passing solutions provided with the original mobile ion, which is deposited in the resin and dislodges the ions captured during depletion.

For the regeneration of ion exchange resins it is used:

- Common salt (sodium chloride) to regenerate strong acid cation resins.